SACHS Racing Damper System

Racing Damper **RD 36-2** (with hose)

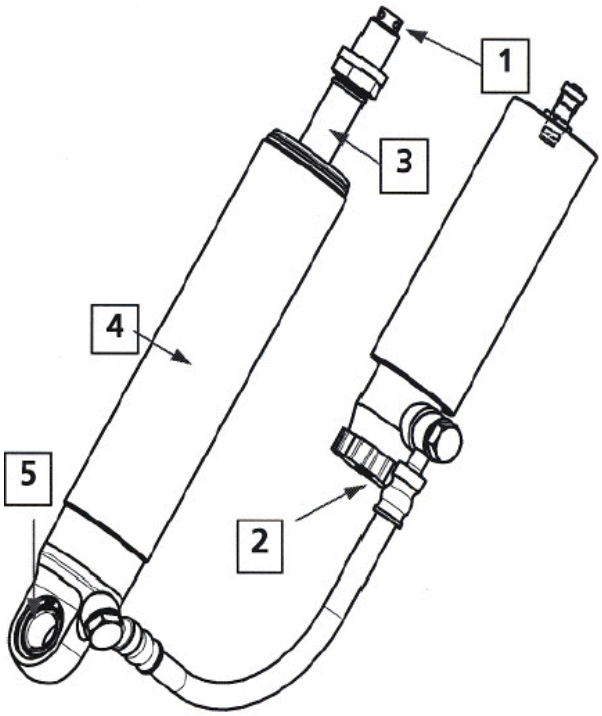

The **RD 36-2** works on the single tube gas pressure principle, however the internal pressure can be kept low by using a remote reservoir with adjustable bump valve.
In connection with optimized seals and guide sleeves the friction of this damper is reduced to a minimum. This guarantees optimal responding behaviour.
The floating piston installed in the remote reservoir prevents mixing of oil and gas. This also prevents from cavitation at high effort, which would lead to a decrease of damping force.
The damping forces of rebound and bump are independent adjustable. The rebound damping **(1)** can be adjusted infinetely via an adjusting wheel on the top of the piston rod. The large adjusting range offers a broad tuning potential for various track conditions.
The bump damping forces can be adjusted via clicks by a knob **(2)** placed at the remote reservoir.
The **RD 36-2** has a piston diameter of 36 mm (thread on body M42x1.5), which gives the possibility of using at adverse placement conditions. The damper can be installed in every position.
The bending stiffness of the 15 mm-piston rod **(3)** guarantees high reliability.
The lightweight aluminium body **(4)** is manufactured out of precision tube, which has a very smooth running surface. In combination with a special coating it guarantees a high abrasion resistance at lowest friction.
The PTFE-coated bearings **(5)** which are free of play have got an inner diameter of 12,7 mm.
The possibility to choose different lengthes of the hose is resulting in a flexible placement on the car.
The accessory components like top eye and spring seats are available in different dimensions and can be ordered separately.
The damping characteristic can be chosen out of various basic options. Special settings are also available.
The damper gets delivered with a setting instruction and graphs showing the damping characteristics.

SACHS
RACE ENGINEERING

Racing Damper **RD 36-2** (with hose)

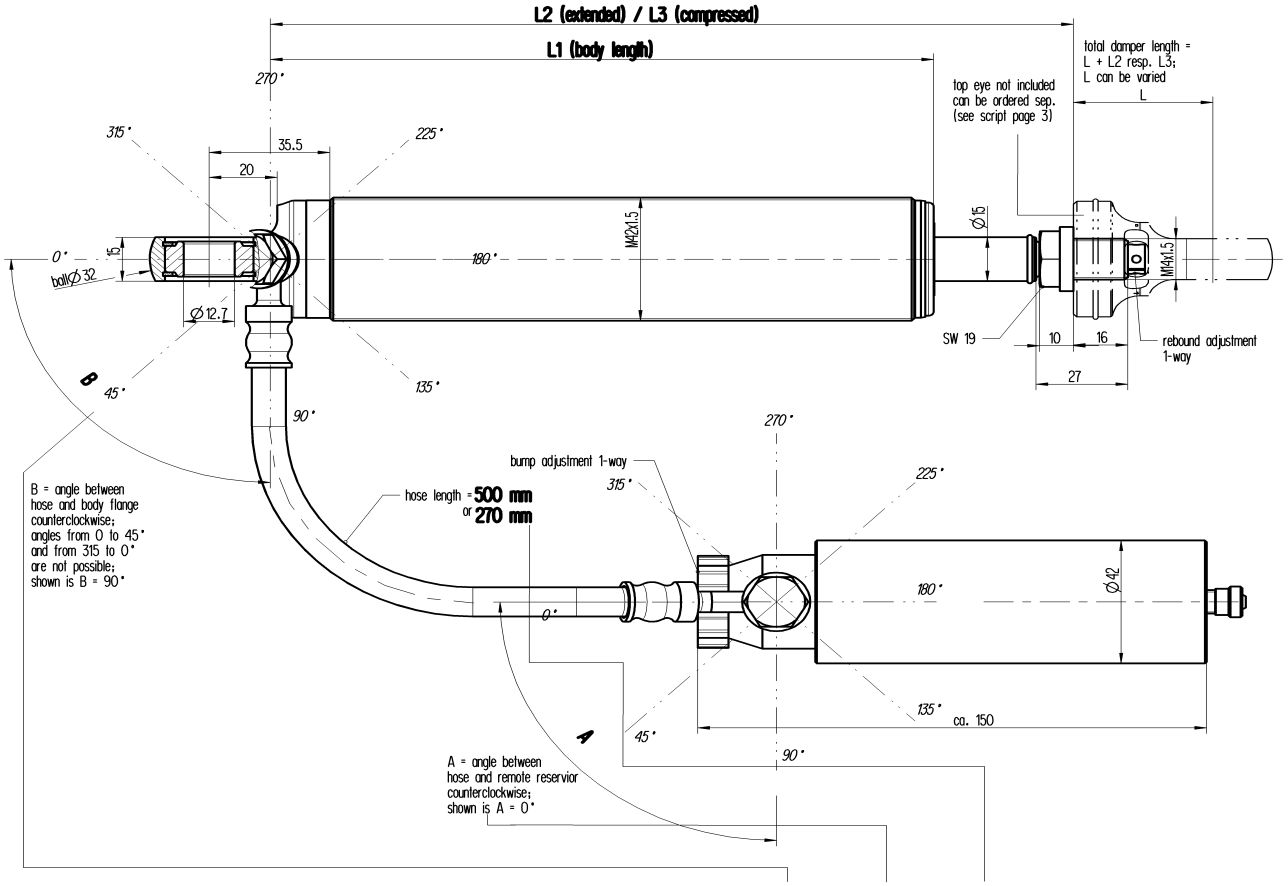

order example: 88 1700 114 912 - 203 - C - 2 - B90 - A0 - 270

- 88 1700 114 912: Identity number
- 203: body length L1
- C: identification Letter for stroke
- 2: settings (see setting examples attached)
- B90: sign for angle between hose and body flange
- A0: sign for angle between hose / remote reservior
- 270: hose length

Kenn-buchst.	A		B		C		D		E		F		G		H		I		K		L	
Hub	38		48		58		68		78		88		98		108		118		128		138	
L1	L2	L3	L2	L3	L2	L3	L2	L3	L2	L3	L2	L3	L2	L3	L2	L3	L2	L3	L2	L3	L2	L3
143	194	156	204	156																		
153	204	166	214	166	224	166																
163	214	176	224	176	234	176	244	176														
173	224	186	234	186	244	186	254	186	264	186												
183	234	196	244	196	254	196	264	196	274	196	284	196										
193	244	206	254	206	264	206	274	206	284	206	294	206	304	206								
203			264	216	274	216	284	216	294	216	304	216	314	216	324	216						
213					284	226	294	226	304	226	314	226	324	226	334	226	344	226				
223							304	236	314	236	324	236	334	236	344	236	354	236	364	236		
233									324	246	334	246	344	246	354	246	364	246	374	246	384	246

all dimensions in [mm]

SACHS RACE ENGINEERING

Racing Damper

RD 45-2 (2-way adjustable)
and
RD 45-3 (3-way adjustable)

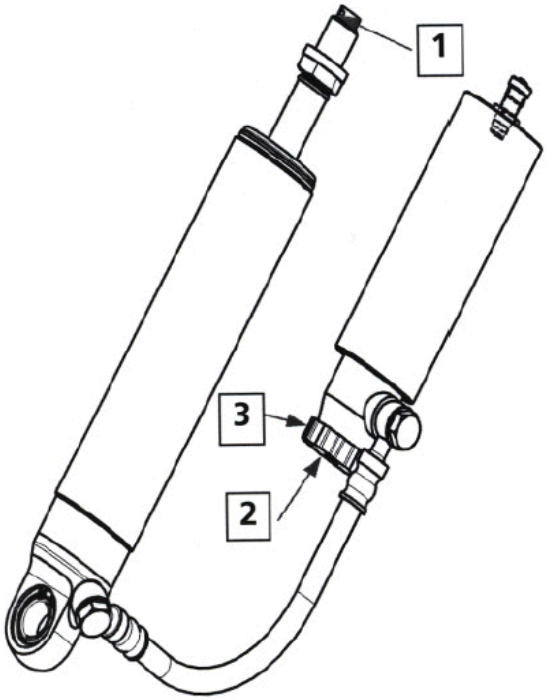

The **RD 45-2** and **RD 45-3** racing dampers uses the same working principle as the **RD 36-2** (see page 1) damper. They are both gas pressurized mono tube dampers, with independently adjustable rebound and bump (compression) damping forces. Through there bigger piston, and body tube diameters (45mm), they containing a larger volume of oil. This leads to an increased power reserve, especially for high operation temperatures. Apart from this advantage, it is also possible to generate higher damping forces with these dampers.
They are first choice, when it comes to touring car racing, where long strokes and high vehicle weight requiring a more powerful damper design. The main damper body is split into two separate parts, the outer damper tube and the flange-type part which contains a PTFE coated high quality bearing (inner bearing diameter is as 12,7 or 15 mm). This allows more budget friendly repairs in case of damage, and easier and quicker alterations to the stroke or the overall lengths of the damper.
The biggest advantage of the **RD 45-3** damper is the possibility to adjust the bump (compression) damping forces individual for low (**2**) and high (**3**) piston/shaft speeds. This together with the rebound force adjustment (1) increases the opportunities for adjustments. The increased opportunities in adjustments will make it even easier and quicker to fine tune the vehicle set-up, and to react to specific track and whether conditions, as well as to drivers preferences. The **RD 45-3** damper is the choice of professional race teams and ambitious racers all over the world, and offers an excellent value to cost relation.

typical application includes:
touring cars, GT cars, hill climbs,
slalom and sprint races,
road and circuit racing

SACHS
RACE ENGINEERING

Racing Damper **RD 45-2** (with hose)

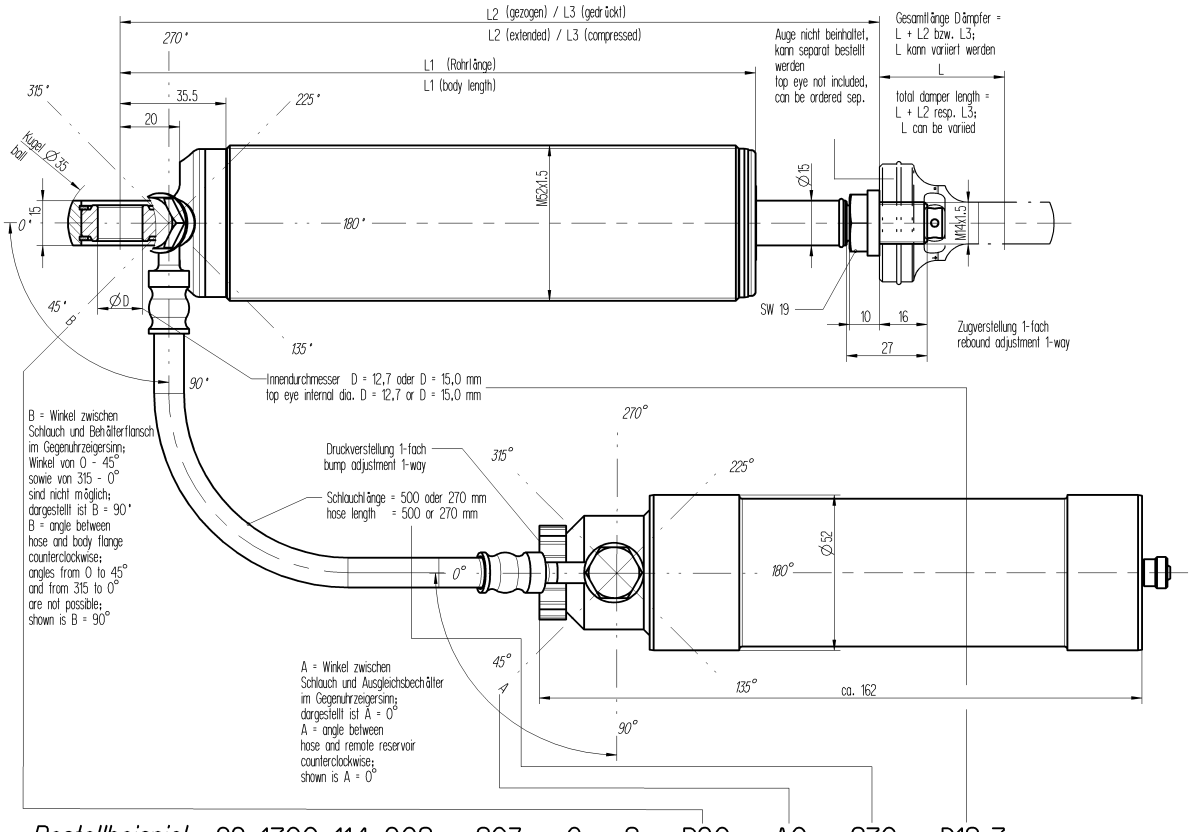

Bestellbeispiel: 88 1700 114 902 - 203 - C - 2 - B90 - A0 - 270 - D12,7
order example:

- Identnummer / identity number
- Rohrlänge L1 / body length L1
- Kennbuchstabe für Hub / identification letter for stroke
- Einstellung (siehe beiliegendes Kennlinienblatt) / setting (see setting examples attached)
- Kennzeichen für Winkel Schlauch / Behälterflansch / sign for angle between hose and body flange
- Kennzeichen für Winkel Schlauch / Ausgleichsbehälter / sign for angle between hose and remote reservoir
- Schlauch länge 270 oder 500 mm / hose length 270 or 500 mm
- Gelenkaugeinnendurchmesser 12,7 oder 15,0 mm / top eye internal dia. 12,7 or 15,0 mm

Kennbuchst.	A		B		C		D		E		F		G		H		I		K		L		M		N		O		P		R		S	
Hub	38		48		58		68		78		88		98		108		118		128		138		148		158		168		178		188		198	
L1	L2	L3	L2	L3	L2	L3	L2	L3	L2	L3	L2	L3	L2	L3	L2	L3	L2	L3	L2	L3	L2	L3	L2	L3	L2	L3	L2	L3	L2	L3	L2	L3	L2	L3
143	194	156	204	156																														
153	204	166	214	166	224	166																												
163	214	176	224	176	234	176	244	176																										
173	224	186	234	186	244	186	254	186	264	186																								
183	234	196	244	196	254	196	264	196	274	196	284	196																						
193	244	206	254	206	264	206	274	206	284	206	294	206	304	206																				
203			264	216	274	216	284	216	294	216	304	216	314	216	324	216																		
213					284	226	294	226	304	226	314	226	324	226	334	226	344	226																
223							304	236	314	236	324	236	334	236	344	236	354	236	364	236														
233									324	246	334	246	344	246	354	246	364	246	374	246	384	246												
243											344	256	354	256	364	256	374	256	384	256	394	256	404	256										
253													364	266	374	266	384	266	394	266	404	266	414	266	424	266								
263															384	276	394	276	404	276	414	276	424	276	434	276	444	276						
273																	404	286	414	286	424	286	434	286	444	286	454	286	464	286				
283																			424	296	434	296	444	296	454	296	464	296	474	296	484	296		
293																					444	306	454	306	464	306	474	306	484	306	494	306	504	306
303																							464	316	474	316	484	316	494	316	504	316	514	316
313																									484	326	494	326	504	326	514	326	524	326
323																											504	336	514	336	524	336	534	336
333																													524	346	534	346	544	346

88 1700 114 902.dw

alle Maße in [mm]
all dimensions in [mm]

SACHS RACE ENGINEERING

Racing Damper **RD 45-3** (with hose)

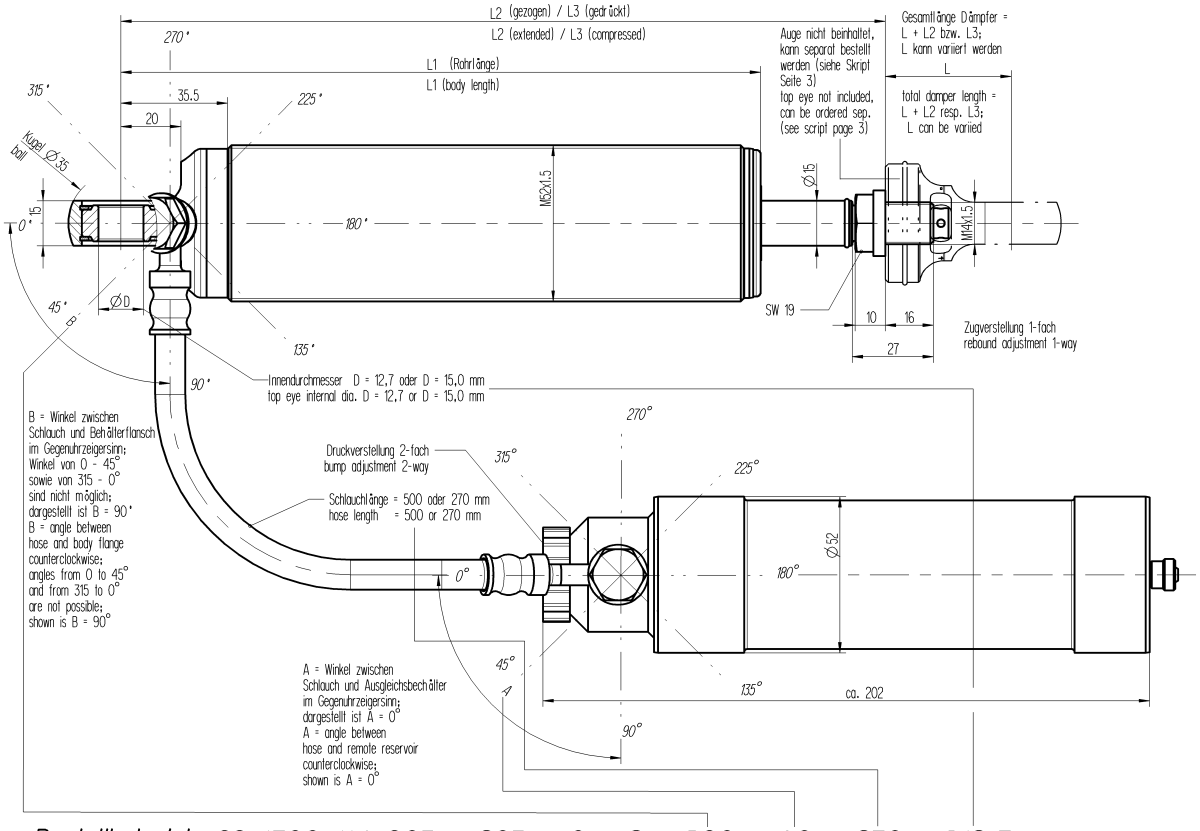

Bestellbeispiel: 88 1700 114 903 - 203 - C - 2 - B90 - A0 - 270 - D12,7
order example:

- Identnummer / identity number
- Rohrlänge L1 / body length L1
- Kennbuchstabe für Hub / identification letter for stroke
- Einstellung (siehe beiliegendes Kennlinienblatt) / setting (see setting examples attached)
- Kennzeichen für Winkel Schlauch / Behälterflansch / sign for angle between hose and body flange
- Kennzeichen für Winkel Schlauch /Ausgleichsbehälter / sign for angle between hose and remote reservoir
- Schlauch länge 270 oder 500 mm / hose length 270 or 500 mm
- Gelenkaugeinnendurchmesser 12,7 oder 15,0 mm / top eye internal dia. 12,7 or 15,0 mm

Kennbuchst.	A		B		C		D		E		F		G		H		I		K		L		M		N		O		P		R		S	
Hub	38		48		58		68		78		88		98		108		118		128		138		148		158		168		178		188		198	
L1	L2	L3	L2	L3	L2	L3	L2	L3	L2	L3	L2	L3	L2	L3	L2	L3	L2	L3	L2	L3	L2	L3	L2	L3	L2	L3	L2	L3	L2	L3	L2	L3	L2	L3
143	194	156	204	156																														
153	204	166	214	166	224	166																												
163	214	176	224	176	234	176	244	176																										
173	224	186	234	186	244	186	254	186	264	186																								
183	234	196	244	196	254	196	264	196	274	196	284	196																						
193	244	206	254	206	264	206	274	206	284	206	294	206	304	206																				
203			264	216	274	216	284	216	294	216	304	216	314	216	324	216																		
213					284	226	294	226	304	226	314	226	324	226	334	226	344	226																
223							304	236	314	236	324	236	334	236	344	236	354	236	364	236														
233									324	246	334	246	344	246	354	246	364	246	374	246	384	246												
243											344	256	354	256	364	256	374	256	384	256	394	256	404	256										
253													364	266	374	266	384	266	394	266	404	266	414	266	424	266								
263															384	276	394	276	404	276	414	276	424	276	434	276	444	276						
273																	404	286	414	286	424	286	434	286	444	286	454	286	464	286				
283																			424	296	434	296	444	296	454	296	464	296	474	296	484	296		
293																					444	306	454	306	464	306	474	306	484	306	494	306	504	306
303																							464	316	474	316	484	316	494	316	504	316	514	316
313																									484	326	494	326	504	326	514	326	524	326
323																											504	336	514	336	524	336	534	336
333																													524	346	534	346	544	346

88 1700 114 902.dw

alle Maße in [mm]
all dimensions in [mm]

SACHS RACE ENGINEERING

Top eye in plug design

Version 1

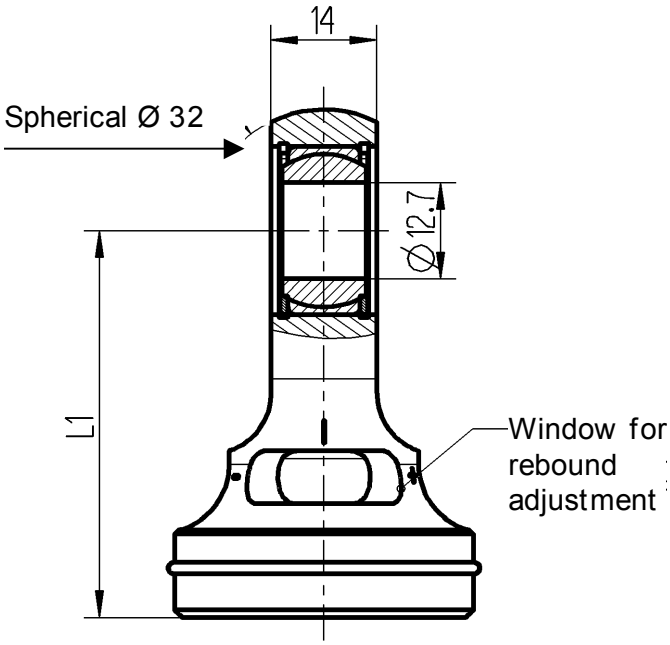

Bestellnummer Order no.	L1
001771999055	41.0
001771999056	51.0
001771999057	61.0
001771999058	71.0
001771999059	81.0
001771999060	91.0
001771999061	101.0

Version 2

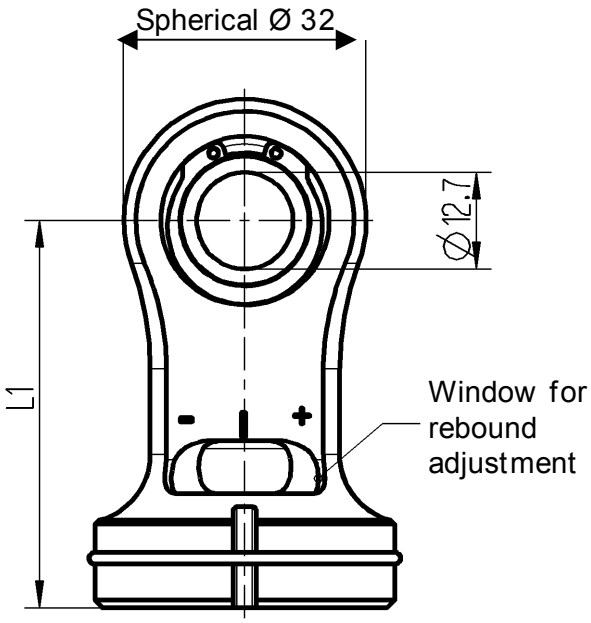

Bestellnummer Order no.	L1
001771999041	41.0
001771999042	51.0
001771999043	61.0
001771999044	71.0
001771999045	81.0
001771999046	91.0
001771999047	101.0

SACHS
RACE ENGINEERING

Version 3
(only RD 45)

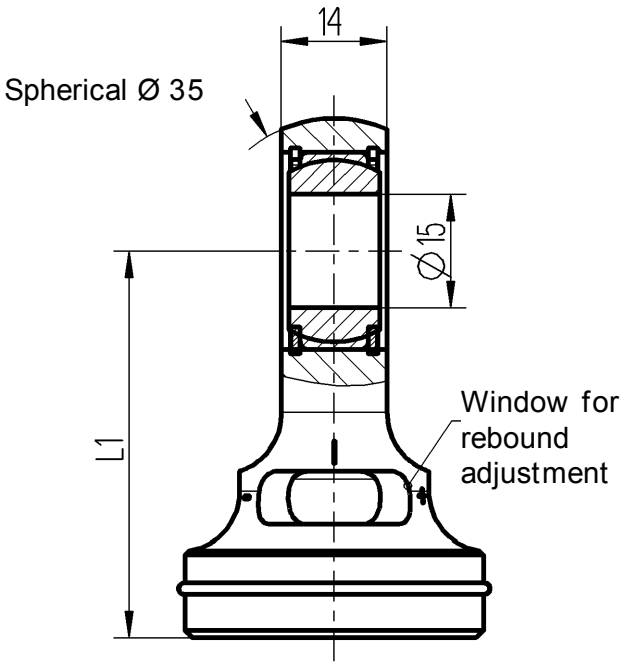

Bestellnummer Order no.	L1
001771999062	41.0
001771999063	51.0
001771999064	61.0
001771999065	71.0
001771999066	81.0
001771999067	91.0
001771999068	101.0

Version 4
(only RD 45)

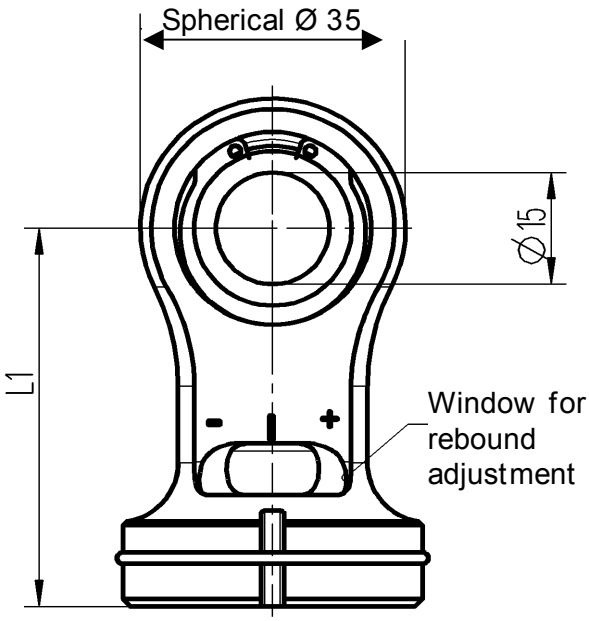

Bestellnummer Order no.	L1
001771999048	41.0
001771999049	51.0
001771999050	61.0
001771999051	71.0
001771999052	81.0
001771999053	91.0
001771999054	101.0

Spring seat in plug design

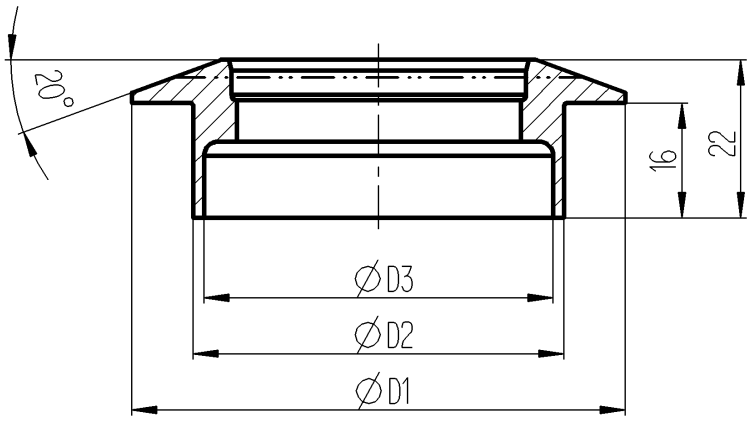

Ordner no.	ØD1	ØD2	ØD3	Internal-spring-Ø
00 1733 999 300	66.0	47.8	44.8	48 mm
00 1733 999 301	75.0	56.5	53.5	2 1/4 inch
00 1733 999 302	66.0	49.5	46.5	2 inch
00 1733 999 303	82.0	69.3	60.3	2 1/2 inch
00 1733 999 304	77.0	59.5	56.5	60 mm

Intermediate ring

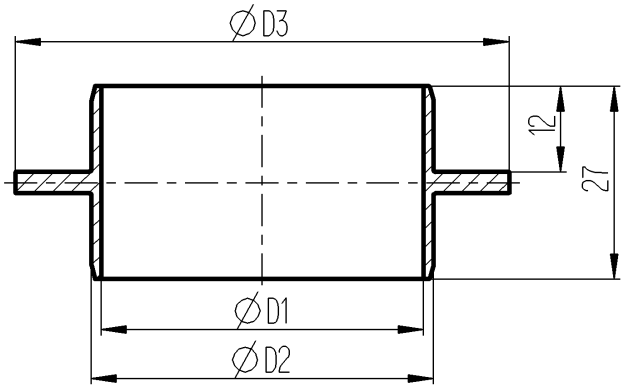

Ordner no.	ØD1	ØD2	ØD3	Internal-spring-Ø
00 1733 999 312	45.3	47.8	69.0	48 mm
00 1733 999 313	47.0	49.5	69.0	2 inch
00 1733 999 314	54.0	56.5	75.0	2 1/4 inch
00 1733 999 315	57.0	59.5	77.0	60 mm
00 1733 999 316	61.0	63.5	82.0	2 1/2 inch

SACHS
RACE ENGINEERING

Spring seat

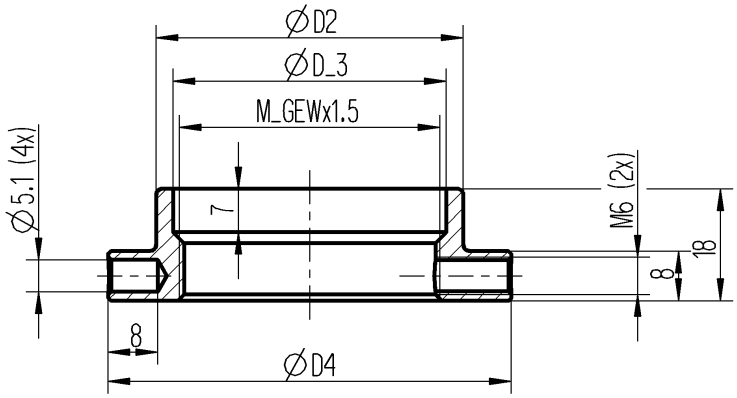

Ordner no.	∅D2	M_GEW	∅D3	∅D4	Internalspring-Ø	application
00 1733 999 364	47.8	42	43	65	48 mm	RD 36
00 1733 999 381	49.5	42	43	65	2 inch	RD 36
00 1733 999 365	57	42	43	75	2 1/4 inch	RD 36
00 1733 999 370	57	52	52.5	75	2 1/4 inch	RD 45
00 1733 999 369	59.5	52	52.5	75	60 mm	RD 45

Counter Ring

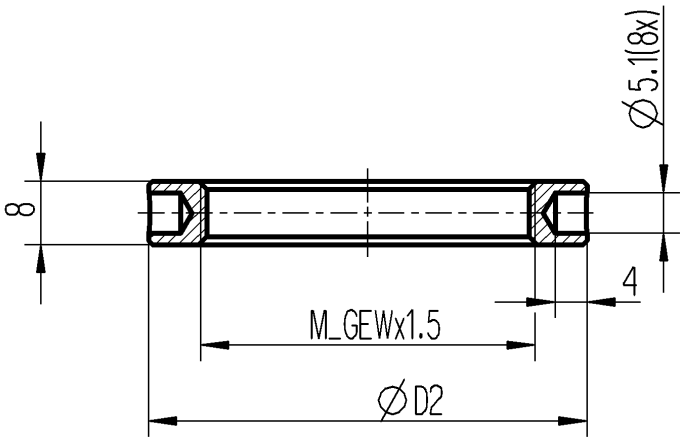

Order no.	∅D2	M_GEW	application
00 1733 999 371	65	52	RD 45
00 1733 999 374	55	42	RD 36

SACHS RACE ENGINEERING

SACHS 4-way adjustable Formula Strut

The SACHS **Formula** strut is a four way adjustable damper, which offers independent adjustments in bump (compression) and rebound (droop).
The adjustments can be made separate for high and low shaft (damper) speeds.
This gives you a very broad range of individual settings, to scope with a wide variety of track and weather conditions, as well as driver requests.

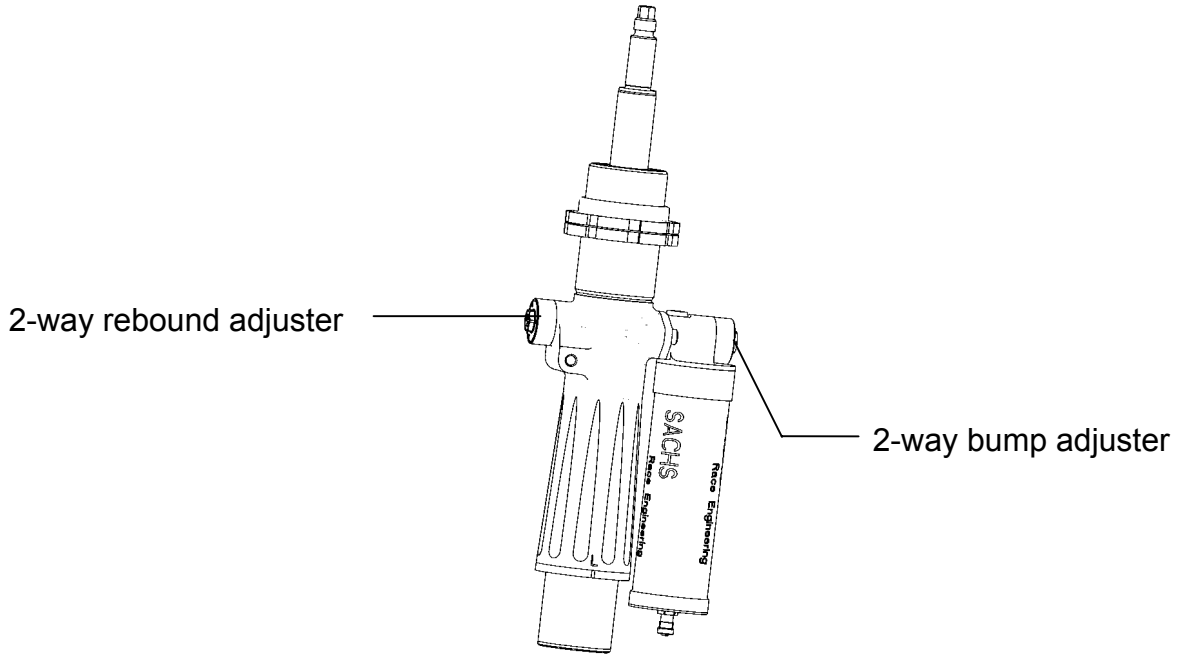

Technical Specifications:

- gas pressurized strut with external reservoir, made from high tensile alloy
- bump and rebound independent adjustable, when fitted in the car
- rebound separate adjustable for low-speed and high-speed
- bump separate adjustable for low-speed and high-speed
- designed for spherical bearing top mount
- light weight, ∅ 25mm shaft (piston rod) for increased bending stiffness
- friction-optimised seals and guides for optimal response and smooth operation
- height adjustable spring seat for coil over racing springs (id 60mm)
- damper comes with a standard factory setting, alternative settings available on request
- all dampers are delivered with comprehensive setting charts and manuals

Setting Instructions:

Low-Speed Adjuster:

- The adjuster has 16 definite positions with a noticeable “click”, so it is easy and repeatable to count to the right setting. The positions are marked from 1-8. (Position 1 soft, Position 16 hard – two turns)

High-Speed Adjuster:

- The adjuster has 11 definite positions with a noticeable “click”, so it is easy and repeatable to count to the right setting. The positions are marked from –5 - +5. (factory setting is position 0) (Position -5 soft, Position +5 hard).

Rebound (Droop): Bump (Compression):

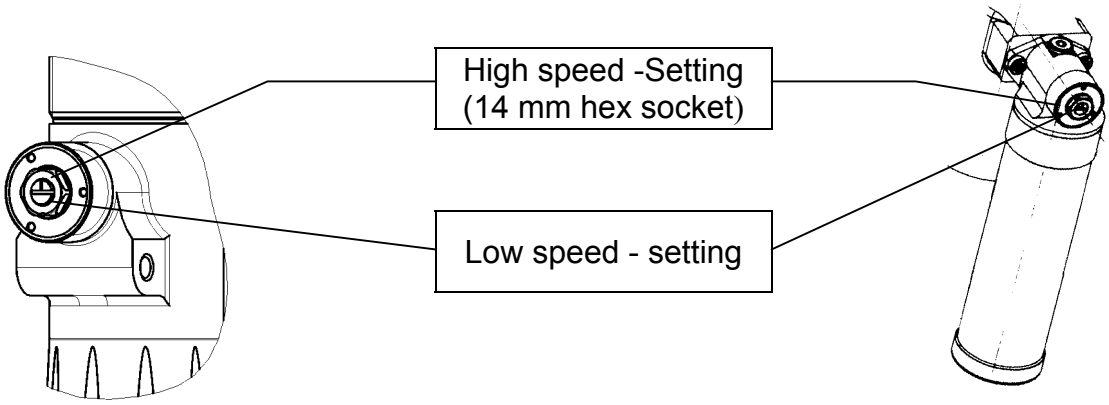

The following notation was imposed:

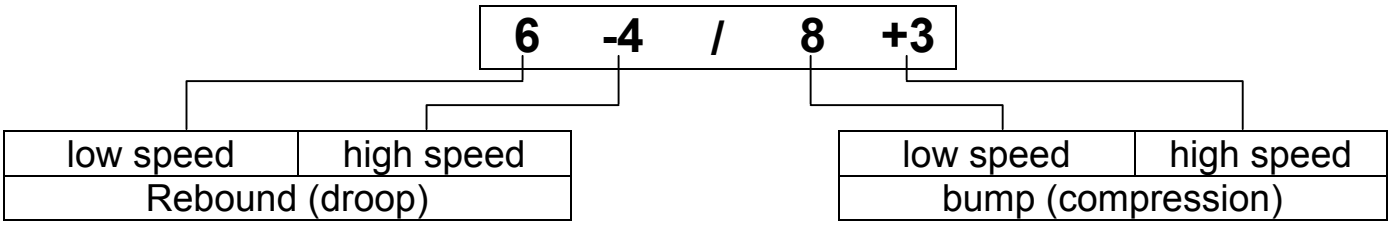

External pressure reservoir (canister)

To ensure consistent and efficent operation in all situations, even under the most demanding conditions, all dampers are gas pressuriezied with nitrogen.

Important: The gas pressure should be checked, every time before the damper is used. When checking the gas pressure, please make sure that the damper is fully extented.
Gas pressure: 5 bar (± 1 bar) at 20 C.

For further information, please do not hesitate to contact us.

ZF Sachs Race Engineering GmbH
Ernst-Sachs-Strasse 62

97424 Schweinfurt
Germany

Tel. +49 9721 98 3258
Fax +49 9721 98 4299

e-mail: service.sre@zf.com
www.sachs-race-engineering.de

Issue: 11/2004

SACHS
RACE ENGINEERING