SAE TECHNICAL PAPER SERIES

2002-01-3285

Effectively Approaching and Designing a Suspension with Active Damping

Badih Jawad and James Todd
Lawrence Technological University

Reprinted From: Proceedings of the 2002 SAE Motorsports Engineering Conference and Exhibition (P-382)

Motorsports Engineering Conference & Exhibition
Indianapolis, Indiana
December 2-5, 2002

SAE International™

400 Commonwealth Drive, Warrendale, PA 15096-0001 U.S.A. Tel: (724) 776-4841 Fax: (724) 776-5760 Web: www.sae.org

ISSN 0148-7191

Printed in USA

2002-01-3285

Effectively Approaching and Designing a Suspension with Active Damping

Badih Jawad and James Todd
Lawrence Technological University

ABSTRACT

This paper discusses how to effectively design and set-up an ideal spring/damper combination in a low-mass open wheeled racecar to properly control vehicle handling and gain optimum performance of the system.

The system that will be discussed is outfitted with a non-parallel, unequal length SLA suspension that was designed and raced at the 2001 Formula SAE competition. The focus of this paper will be more on how to choose an ideal suspension set-up for a low-mass open wheeled racecar, while considering the various variables that can affect the system as a whole. To properly design a suspension, a passive system will be used, and then the performance gains of a semi-active system will be introduced and discussed.

INTRODUCTION

How to effectively design a suspension system with the correct dampers and springs while taking into account all of the known and unknown variables, is one of the major obstacles that faces the automotive industry today, just as it has for many years. Many aspects can define suspension characteristics such as, driving conditions, tires, chassis geometry, weight, cost, or just the driver's preference on how he or she wants the car to feel. Looking at the type of car that we are outfitting, some of the variables that may be present in a passenger car situation can be ignored, while others become more important. This can be a result of different consumer demands, different manufacturer specifications, or perhaps aid in cost savings. In Formula One, the focus is winning, and without an effective suspension, you do not have a car.

When McLaren F1 debuted it's version of fully active suspension in Formula 1 racing, it was obvious to the racing community that active suspension was definitely one way to be faster than the rest of the field. So much faster that it was eventually banned along with all electronic aids for safety reasons, or in the true spirit of sport - we all hope. Nevertheless, the performance gains from this type of suspension commanded the attention and subsequent research of a great deal of individuals involved in racecar suspension design. The ability to have some or all control over wheel movement allows the engineer to position the chassis in an optimal position for any given scenario on the racetrack. However, this very beneficial replacement of the passive suspension system has few drawbacks, not the least of which is cost. The fully active suspension system was expensive and required large amounts of energy.

With the advent of magneto and electro-rheological technology, more possibilities in efficient electronic control of mechanical systems have surfaced. Magneto-Rheology (MR) used in our shocks is a fluid, which under normal conditions is like normal 80W shock oil. Upon exposure to a magnetic field, the oil can become near solid because of magnetic particles that cling together. The strength of this bond between particles and the viscosity of the oil is proportional to the strength of the magnetic field through which it is flowing. The oil will effectively develop a yield strength that mimics a fluid of much higher viscosity [1]. Essentially we have a backward way of valving our shocks on the fly. These new levels of efficiency and technology increase the practicality of both cost and energy.

An active shock damping system can be used in a racecar to maintain a constant vehicle attitude,

provide greater predictability, and aid in controlling dive and squat brought on by acceleration and deceleration. With active damping control for bump and rebound in cornering, the springs can be dampened enough to slow body roll without upsetting the drivers line or lifting a wheel entirely off the ground. In bump, there is better control over weight transfer acceptance without raising the effective spring rate while maintaining an acceptable rebound rate to protect the vehicle from jacking. Active damping will also minimize tire compliance by constantly tuning itself to allow a balanced energy exchange between spring and damper.

This paper will first discuss the approach one should take when designing a suspension, what variables to look at first, and then we will look at an active damping system concept to reduce the effects of non-desirable characteristics inherent in the passive suspension system.

SYSTEM CONCEPT

The ultimate goal for damping system is to provide a system that will creatively protect the tire patch at all four wheels in compression and rebound, while maintaining vehicle responsiveness and control at every instant. Many variables are introduced when a suspension setup is being designed that are the core essentials to a successful execution. These certain core variables are the variables of concern, and are also the areas that are sometimes ill defined, not visited, or just unknown.

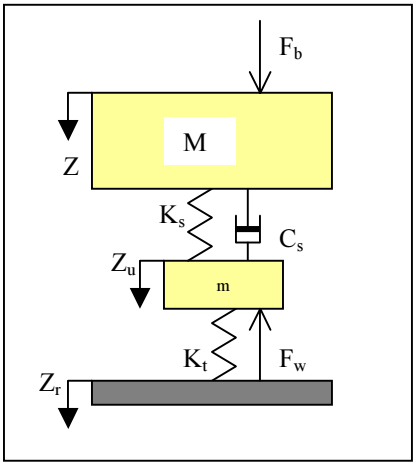

Figure 1. Quarter-car Model

By examining the quarter car model representation that is shown in Figure 1., we can start to sculpt the system and discover how the variables interact with each other.

Differences in handling can be described as follows: Shocks affect dynamic or transitional handling. For example, on a slalom course, or when you first hit your brakes, or when you first start into a turn and the weight is transitioning to the outside wheels, etc. In other words, whenever the suspension is moving. After the suspension stops moving, you get into static or steady-state handling which is affected by springs and sway bars. For example, on a skid pad, or in the middle of a long sweeping turn. There is a lot of overlap, but the above is true in general. As far a ride quality, both springs and shocks can affect ride harshness. Similarly, stiff springs/soft shocks will cause the pogo effect over bumps. The car will transition weight fore/aft and side-to-side much faster, and with less control. A Soft spring/stiff shock combination provides a much more controllable handling setup. Using this setup allows weight to shift more slowly and controllably. The danger here is that if the shocks are too stiff, the suspension will not handle washboard bumps well. Of course, this argument can be made for the other configuration as well. The soft shock setup allows the suspension to move too much, the stiff shock setup doesn't allow enough movement. The goal is to find a condition between the lesser of the two evils.

NATURAL FREQUENCY

One of the first variables that we want to define and target would be the natural frequency of the vehicle. With a low-mass formula SAE car and traveling at 100 km/h maximum speeds, we immediately put ourselves into a special category. Without speed, high down-force is hard to achieve, therefore our natural frequency is going to have a target that is higher than usual. Using a targeted sprung mass, and the spring rates of both the tires and springs; we can calculate the natural frequency of the front and rear portions of the suspension. For the application of a low-mass vehicle, an ideal natural frequency to target would be between 2.0Hz and 2.5Hz. If the natural frequency exceeds 2.5Hz we can be at risk for sacrificing our dampening capabilities and if the natural frequency travels below 2.0Hz, we risk responsiveness and sacrifice vehicle feel.

SPRINGS AND RIDE RATES

Another important variable that is necessary to target is the vehicle's front and rear ride rates. The front and rear ride rates should come close to, or equal the front to rear weight distribution. An initial front and rear spring rate is chosen by using Equation (1) along with our targeted mass and tire spring rate. Keep in mind that the front and rear ride rates should correlate to the front to rear weight distribution (with the driver).

DAMPERS

Damping in vehicles is achieved primarily by the actuation of a hydraulic shock absorber. The damper's function is to work in unison with the spring to store the energy created by inputs such as roll or bump, then efficiently dissipate the energy absorbed without upsetting the tires.

The percent damping that is introduced into the system is found by Equation (3). At low frequencies (0.0Hz-1.0Hz) an ideal damping condition would be 100% (critically damped), unfortunately at higher frequencies with heavy damping, we experience extreme lack of isolation. At 200% damped, the suspension is pushed beyond the critical, causing the sprung and unsprung together such that the vehicle will experience 'wheel hop'. With too much damping, the energy can not be absorbed and in the suspension and will go directly to the tires. For this application, a reasonable damping range to stay inside of would be 70%-100%.

VALVING

Full Displaced vs. Rod Displaced Valving

Full displaced valving is a significant advance in shock absorber design and construction because; it reduces internal operating pressures and aeration for greater damping capabilities. Full displaced valving also provides greater latitude in engineering how a shock will perform on a specific vehicle. A typical rod displaced shock has a total of eight valving stages:

A three-stage piston valve
A three-stage base valve
Two stages as the fluid passes through the piston

A full-displaced design allows ten stages by adding a blow-off valve and a dual rate piston, which replenishes the spring to its original preloaded state.

- At slow piston rod speeds, fluid passes through a predetermined orifice area in the valve seat.
- At medium rod speeds, fluid is controlled by which discs act as flat blow-off springs.
- At high speeds, slots in the orifices of the valve plate control fluid.

Piston Valve During Compression

- At slow piston rod speeds, an orifice controls fluid flow
- At progressively faster rod speeds, the dual rate disc system provides two valving stages.
- At very high piston rod speeds, orifice restriction controls fluid flow.

Piston Valve During Extension Cycle

- At slow piston rod speeds, an orifice in the piston valve seat regulates fluid.
- At medium rod speeds, fluid is controlled by the spring and thickness of steel discs.
- At high speeds, inner passage restriction provides control.

In a rod-displaced shock absorber, control is generated with the fluid displaced by the rod, which goes through the base valve during compression. Fluid moving upward past the piston during the compression cycle does no significant work.
When a shock absorber with full displaced valving goes into a compression cycle, the fluid forced up through the piston is performing significant work – resulting in a much more efficient shock absorber.

Piston Speed and Damping Rate

Piston speed is a very important variable in shock performance, and its value versus damping force is what is primarily addressed by our active damping system. We chose to look at piston speed as the controller of damping force creation, and valving as the controller of piston speed. By using this convention we are able to qualify our damping curves and better understand our shock performance when piston speed is constant. Conventional shocks can have different damping rates depending on their design. When a shock is said to be "progressive" in nature, it means the damping force increases progressively with piston speed. The same is true for the other two types, "linear" and "regressive", except for their graphical relationship. The illustrations below have been provided to explain. When the damper design is final, we can come to the conclusion that piston speed is function of the magnitude of what the suspension must absorb at a given vehicle speed.

DYNAMIC APPLICATION

The object of any suspension system is to protect the sprung mass of the vehicle from experiencing the low and high frequency obstacles in the vehicles path while still maintaining sufficient, if not desirable control at low and high speeds. For our open wheel car, driver comfort may be sacrificed somewhat but still must be enough to facilitate a talented driver. We also must be able to undergo lateral accelerations of 1.4 g. Along with these requirements we are then presented with the task of being able to do this while

protecting the contact patch of the tire and having ultimate control over transitional vehicle movement.

IMPLEMENTATION

The shocks in our system are where the electrical/mechanical interface takes place. Each shock is outfitted with a coil around the shock oil passage at the valve location. The shock oil, which is a MR fluid, is forced through this passage each time the shock piston is displaced. When the coil is charged, a magnetic field is generated which acts to change the effective viscosity of the shock oil that is moving through it. The result is control over the piston speed of the shock, or control over damping forces generated at the shock. The magnet, or coil in concert with the valve passage must be designed to minimize power consumption while achieving sufficient oil viscosity to generate or resist the necessary damping forces. The suspension system has now been successfully enhanced so that some control may be had over most of the mass being accelerated.

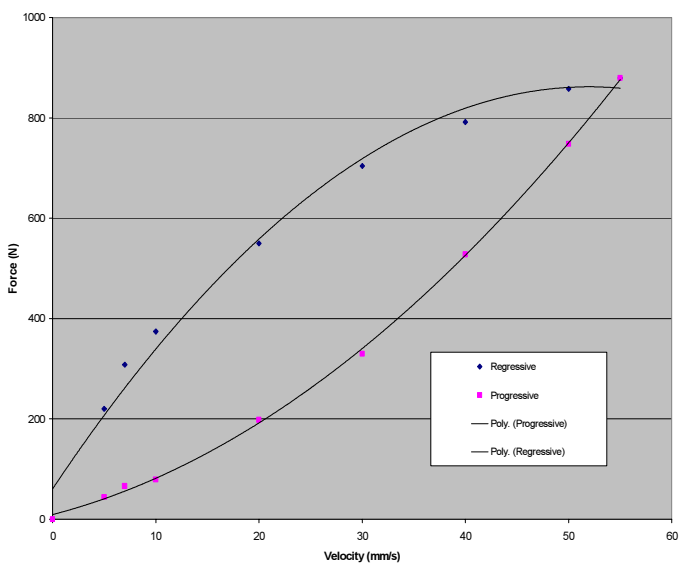

Figure 2. Typical Damping Force Curves

For our application, regressive seems optimal since it yields better damping control at low piston speeds and is harder to upset at higher speeds (Figure 2).
Active damping however allows us to have any type of damping curve we choose. Although regressive curves seem attractive, our curve would be ideal if it were flat. If we can achieve constant damping force at most piston speeds, we can design our dampers to deliver loads across the vehicle, from one tire to its opposite while maintaining an optimal condition at the contact patch. Better, being able to control the damping force at the same speed would permit good piston movement at low speeds, which is the control we must have to deal with fundamental suspension reactions in bump and rebound. Active damping will permit this (Figure 2).

An accelerometer is a device that converts acceleration as an input to an electrical signal as an output that is proportional to the input capacity of the device itself. Since our system must react to any acceleration it will experience, we must start with accelerometers installed such that a reading can be taken in the positive or negative x and y directions. The z direction is neglected since more favorable readings are obtained when the x and y accelerometers are tweaked around the actual roll axis of the vehicle. Another method for determining chassis movement, which was not used, is reading steering wheel movement and comparing that to actual shock displacement. This seems to be too anticipatory in nature though, since steering wheel position and wheel displacement are really not a positive indication of the vehicles situation. Furthermore, the amount of overhead required for processing was much higher than with the accelerometers.

SPRINGS AND RIDE RATES UNDER ACTIVE DAMPING

Now that we have an electrical indication of the accelerations the vehicle is undergoing, we can give the controller the information it needs to control our damping. The controller will take this information, run through a preprogrammed algorithm, which is essentially a coded P.I.D. controller, and output a signal to the shock at each wheel. The microcontroller will collect information from accelerometers, mounted in the front and rear of the vehicle, and essentially predict from known suspension kinematics how the wheels will react. This signal will be converted to a digital input, processed by the microcontroller with a suitable return signal to each damper. In the event of a system failure, the suspension will perform normally with only one damping rate for rebound and compression. A more detailed and complete discussion of the electrical system will be introduced in the Electrical Design section.

TIRE PATCH

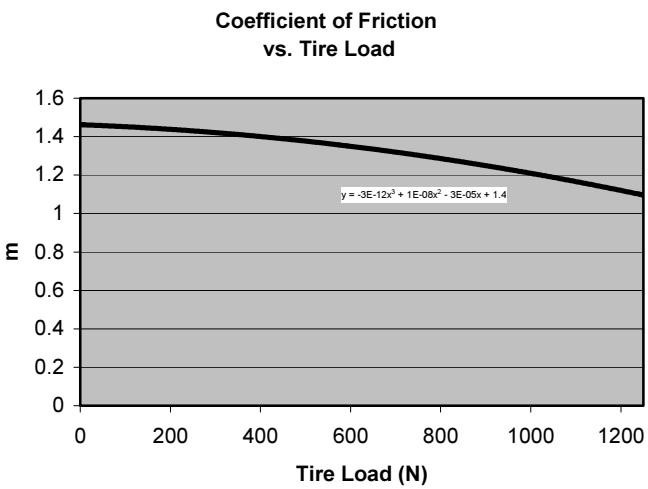

Figure 3. Coefficient of Friction vs. Tire Load

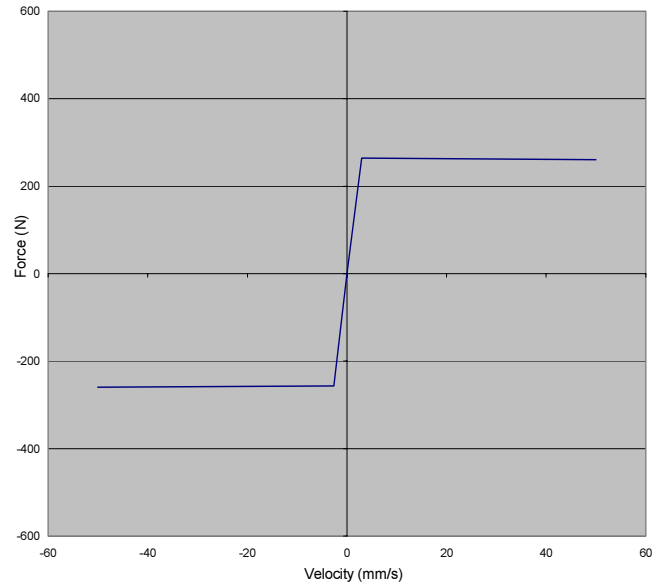

Figure 4. Active Damping Curves

Although tires are one of the most important aspects of the car, we will only touch briefly on what is trying to be achieved and what it is that we don't want to happen.

There are many advantages to having a low mass vehicle. One advantage is the ability to load up a tire at an increased rate without sacrificing the tire's coefficient of friction. The coefficient of friction of a tire is based many variables – Temperature and vertical load are just two of many. As Temperature increases, the coefficient of friction also increases. But, once the temperature goes beyond the threshold temperature for the tire, the coefficient of friction starts to decrease. Also, when the vertical load on the tire increases, the coefficient of friction increases. Again, when you bring the vertical load beyond the load limit of the tire, friction starts to be sacrificed (Figure 3). The coefficient of friction is a design limit of the, it's traction capacity – it's ability to transmit force to the road - opposed to the coefficient of friction, which increases with vertical load.

The rate at which the vertical load is handed from one side to the other - laterally, is of great importance. With active controlled damping rates, the rebound damping of the soon to be un-laden side of the car can be increased. Increasing the damping on the damper that is going into rebound allows the rate at which the vertical load is transferred from one side of the car to the other to increase. Doing so, instantaneously increases the coefficient of friction on the laden tire. Increased friction is directly related to increased lateral acceleration ability (Figure 4).

STRAIGHT LINE BENEFITS

The two conditions most frequently encountered by the suspension as the vehicle moves in a straight line are bump and rebound. For most suspensions, the damper will control how far the wheel moves upward in bump. If the dampers are too soft, the wheel will travel farther than necessary. Going the other way, a damper that is too stiff will act to lift the vehicle in bump, upsetting the contact patch and decreasing the tire footprint on the ground. These issues can be addressed with adjustable damping rates, but when we consider the load transfer that takes place longitudinally due to acceleration or braking the optimal settings become a compromise from one to the other. In rebound the damper tuning is even more important since it essentially allows us a certain amount of suspension travel after each obstacle that it helps us recover from. If the damping is too soft, the suspension will return to its original position too fast which can result in oscillation of the vehicle. If the damping is too stiff though, the suspension will not return to its original position in a reasonable amount of time, which presents a greater problem. The damper must be set to receive from the spring whatever energy has been stored. Stiff damping will hold the spring in compression and essentially jack the vehicle down. In an extreme case, the car may end up with no bump travel at all.

Active damping helps straight-line suspension performance by maintaining proper damping rates in bump and rebound with the added benefit of keeping a constant damping force over the range of piston speeds which is the ability to smoothly transfer loads from one direction to the other.

CORNERING - LATERAL LOAD TRANSFER

Cornering in our vehicle is the area that needs the most attention. As with any kinematic design, our suspension is not ideal for every condition the vehicle will be in. A good design for tire orientation in roll is already lacking in bump performance. However the design, active damping in roll will be used to deal primarily with controlling the speed at which weight is transferred from side to side, while helping the laden side of the vehicle accept this weight and maintain a desirable condition at the tires' contact patch. From a damper perspective, our design considers a roll as having the laden side in bump and the unladen side in rebound. Both sides must cooperate to successfully transfer weight while maintaining maximum traction throughout the turn. When acceleration is put on the vehicle laterally, the unladen side becomes responsible for controlling the speed of the load that is transferred to the laden side. This must be at such a rate that allows the unladen tire to remain on the ground while not upsetting the laden side tire contact patch. The laden side damper must be able to accept this load at a rate that does not demand too much rebound compensation but is not too high so as to reject the load and transfer it to the tire sidewall. The later actually is not an option at all since tire sidewall and suspension component compliance is sure to result in a sudden loss of traction. This is essentially the same problem that comes from the vehicle being over sprung.

The active damping system will control this load exchange by reading the magnitude of the given lateral acceleration and controlling the rate of each damper according the optimum allowed load transfer per unit time.

CORNERING – CROSS WEIGHT TRANSFER

Cross weight transfer, which occurs at the beginning of a turning maneuver, is what we are using to aid in pointing the car into a turn. By drastically increasing the damping on the rebound wheel we are essentially letting the roll stiffness of the car approach infinity for a split second in order to maximize the cornering power of the steered wheel. After this initial transfer occurs the rebound wheel will then resume its normal damping rate and allow the suspension to continue according to its fundamental design. This use of cross weight transfer stalling is best explained by the figure below.

CG (z)	CF poten.	CF poten.	LgLT (N)	LtLT (N)	LtLT (N)	μ effective	CF (N)	CF unladen
10.63	0.00	0.00	0.00	0.00	0.00	1.40	0.00	0.00
10.67	16.69	16.69	5.24	6.85	7.12	1.40	26.25	7.10
10.71	33.38	33.38	10.51	13.75	14.30	1.40	52.51	14.12
10.75	50.08	50.08	15.83	20.70	21.53	1.40	78.77	21.07
10.79	66.77	66.77	21.18	27.70	28.81	1.40	105.05	27.95
10.83	83.46	83.46	26.58	34.75	36.14	1.40	131.32	34.75
10.87	100.15	100.15	32.01	41.86	43.53	1.40	157.61	41.47
10.91	116.84	116.84	37.48	49.01	50.97	1.40	183.90	48.13
10.94	133.54	133.54	42.99	56.21	58.46	1.40	210.19	54.70
10.98	150.23	150.23	48.53	63.47	66.01	1.40	236.49	61.20
11.02	166.92	166.92	54.12	70.77	73.60	1.40	262.79	67.63
11.06	183.61	183.61	59.74	78.13	81.25	1.40	289.09	73.98
11.10	200.30	200.30	65.41	85.53	88.95	1.40	315.40	80.26
11.14	217.00	217.00	71.11	92.99	96.71	1.40	341.71	86.47
11.18	233.69	233.69	76.85	100.50	104.52	1.39	368.02	92.60
11.22	250.38	250.38	82.63	108.05	112.37	1.39	394.33	98.66
11.26	267.07	267.07	88.45	115.66	120.29	1.39	420.65	104.64
11.30	283.76	283.76	94.30	123.32	128.25	1.39	446.96	110.56
11.34	300.45	300.45	100.20	131.03	136.27	1.39	473.27	116.39
11.38	317.15	317.15	106.13	138.79	144.34	1.39	499.58	122.16
11.42	333.84	333.84	112.10	146.60	152.46	1.39	525.89	127.85
11.46	350.53	350.53	118.12	154.46	160.64	1.39	552.20	133.47

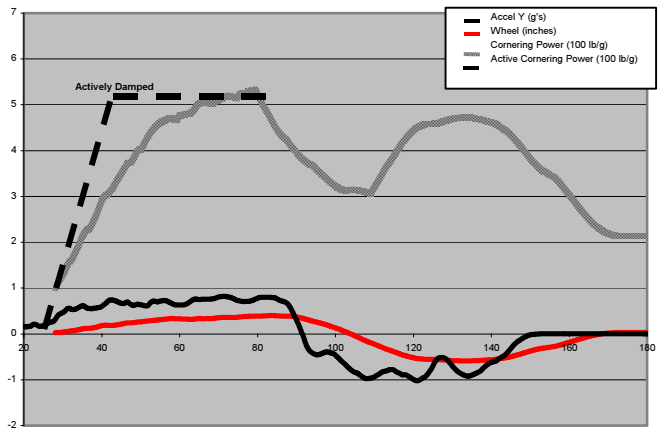

Figure 5. Lateral acceleration and wheel movement vs. time (Actual Track Data)

What is shown in Figure 5, is data that was acquired in real time during successive runs into the same chicane on our practice facilities. The time that we delay the acceptance of the weight transfer is based on the desired vertical load on our laden wheel.

This method has allowed us to increase the speed at which we carry and exit corners leading to better lap times. This has also shown analytically to achieve higher lateral acceleration, but the numbers we are reading through our DAQ are not significantly higher. This leads to a sign of tire under utilization.

TUNING

System tuning is the greatest advantage of the active damping system. The system will tune itself according to what accelerations the vehicle undergoes without remembering anything from the lap before. This is a huge advantage when multiple driving styles need different types of compensation in different situations. First, the controller always tunes the damping to minimize, or eliminate tire compliance in maneuvers. This lets us achieve a primary goal of giving the tire only the type of work it is designed to do. We are able to protect it from any energy that must be absorbed in the shock and spring. Second,

while one driver may have a talent for throttle modulation, another may not. Having constant control over rebound damping, the suspension can adjust itself to resist over-steer brought on by a sudden throttle increase. To a lesser degree dive and squat can be minimized through rebound damping control, although for our application, power is at a premium, and wheel rates can be changed to accommodate this. As a starting point we created a spreadsheet that is based on the mass, weight distribution, track, and wheelbase of our one seater. Below are some of the computed values that we used to base our initial damper setup.

ELECTRICAL DESIGN

INPUT CIRCUITRY

The input circuitry consists of 2 independent G-Sensors; the first one is used to input the forward acceleration and the second one is used to input the lateral acceleration. A C23H1G supplied by VTI HAMLIN is used in the design. The range of this sensor is ±1.5G. The sensor supply voltage is 5 Volts and the output is an analog dual range. The output is centered at 2.5 Volts at the idle state. The change will decrease from 2.5 Volts to 0 Volts at the rate of 1.333 V/g, 50 Hz with a 2% input error. The analog input is then detected by the analog to digital converter of the Microcontroller in order to be used in the algorithms.

CONTROLLER CIRCUITRY

The Core Circuitry consists of the MicroController and the peripheral components. The MicroController part of the design will handle all analog to digital conversions, algorithm calculations, and output control. The peripheral components will transfer the digital output from the Controller into a variable analog output.

MicroController

The MicroController is a Motorola 68HC12 for automotive applications. The Analog to Digital conversion (ADC) rate is set to half the Controller's Oscillating frequency of 16 MHz [6]. Figure 6 shows the hardware connections of the design:

- Liquid Crystal Display (LCD): The LCD connected to PORTA is only for development purposes. It will display messages the software sends to help in the debugging and calibration of the system.

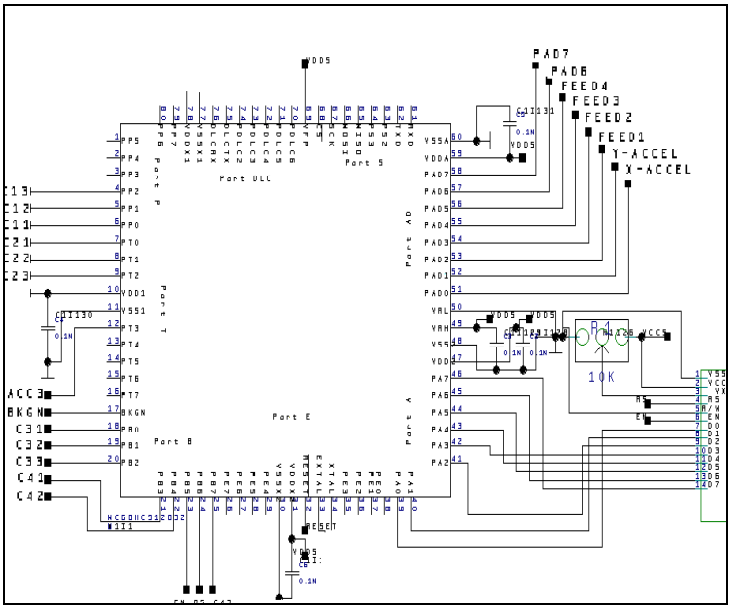

Figure 6. MicroController Connections

- PORTAD: This is the Analog to Digital Converter channel. Both G-sensors are connected to input0 and input1 of this port labeled respectively: X-ACCEL and Y-ACCEL. The input 2-6 are dedicated to the feedback from the shocks. Those four inputs will continuously monitor the voltages at the shock.

- PORTP, PORTT and PORTB: These ports were configured for the digital control of the peripheral circuitry.

PERIPHERAL CIRCUITRY

The output consists of four individual channels; one channel per shock. The analog design allows the switching on and off of one of the desired four voltages for precise stiffness control.

- Analog Level: The Analog Level is directly controlled by the four outputs of the logic circuit shown above. It is a switching voltage source controlled by MOSFETS [5,8]. Each of the MOSFETs has a different potential voltage at the Drain. The Source is the output pin and the Gate is the switching active high logic level voltage. Figure 6 shows one of four output channels. The diodes shown are just for reverse voltage protection. A voltage drop** of roughly 0.5 Volts per diode will give us a lower output potential of

0.5 V, 1 V, and 1.5 V respectively when COILV1, COILV2, or COILV3 are high.

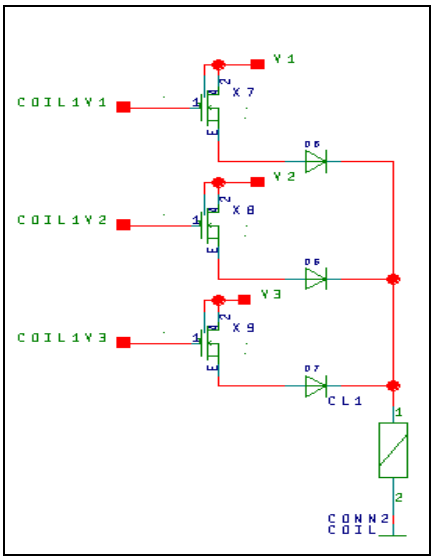

Figure 7. MOSFET output design

**Vout = V1 - 1.5 in volts
Vout = V2 – 1.0 in volts
Vout = V3 – 0.5 in volts

POWER SUPPLY CIRCUITRY

The power supply uses a variable regulator chip with low dropout voltage and wide output voltage range. The national semiconductor regulator LM317 operates under a wide temperature range, which makes it ideal for automotive applications. The typical low dropout voltage Vin-Vout of 1.25 Volts allows the LM317 to operate at low battery voltage [5]. The output voltage can be regulated by varying a resistor, making it easier to calibrate the supply voltages V1-V4. The main supply voltage of 5 Volts, delivering a maximum current of 1.5 A powers the MicroController and the 74HCx series digital chips. Figure 8 shows the hardware connections with R7 being the variable resistance controlling the output voltage. The relation between resistance and output voltage is given by equation 1.

$$V_{out} = 1.25\ V * (1 + R7/R8) \qquad (1)$$

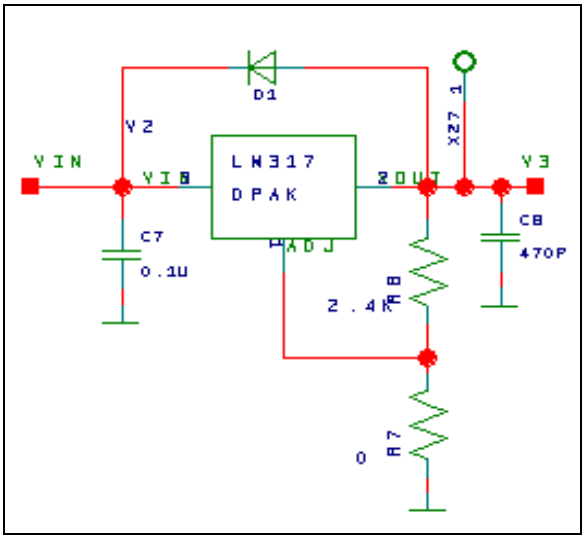

Figure 8. Power Supply

NOTE: The voltage potentials applied to all MOSFETs are also supplied by a similar setup with the value of R7 varying depending on the desired output level.

SOFTWARE DESIGN

The software is a free running input/output loop. The inputs consisting of the lateral and forward acceleration, and the outputs consisting of the activation of one of 3 MOSFETs. The program will run through a series of initialization routines, start scanning the ADC port for any input, runs the input through the algorithms describing the weight distribution of the car vs. acceleration and outputs the appropriate response. The input runs through a series of validation algorithms to confirm that it is a valid input requiring a response on the output at the shocks. The software is designed in a manner that a spike at the input (high rising slope) will not activate any output. The G-input will be divided into 6 different sections. Two conversions take place before the input from the sensor is validated internally by the MicroController.

The first conversion is executed inside the sensor itself. The sensor uses equation 2 to convert the acceleration to a voltage:

$$V_{sens} = (1.333*GIn)+2.5 \qquad (2)$$

Equation 2 will output a voltage decreasing from 2.5V to 0.5V as the deceleration increases and outputs a voltage increasing from 2.5V to 4.5V as the acceleration increases.

The second conversion takes place at the ADC input channel. The ADC uses equation 3 to convert voltage

into a decimal number ranging between 0 and 256 for voltages between 0 and 5V respectively.

$$\text{Dec.Code} = (68.25 * \text{Gin}) + 128 \qquad (7)$$

Figure 9 shows along with the conversion relationship between acceleration and Micro Code Values, the ranges that the software will be using to validate the inputs. These ranges are shown by plot “Range 2” on figure 9.

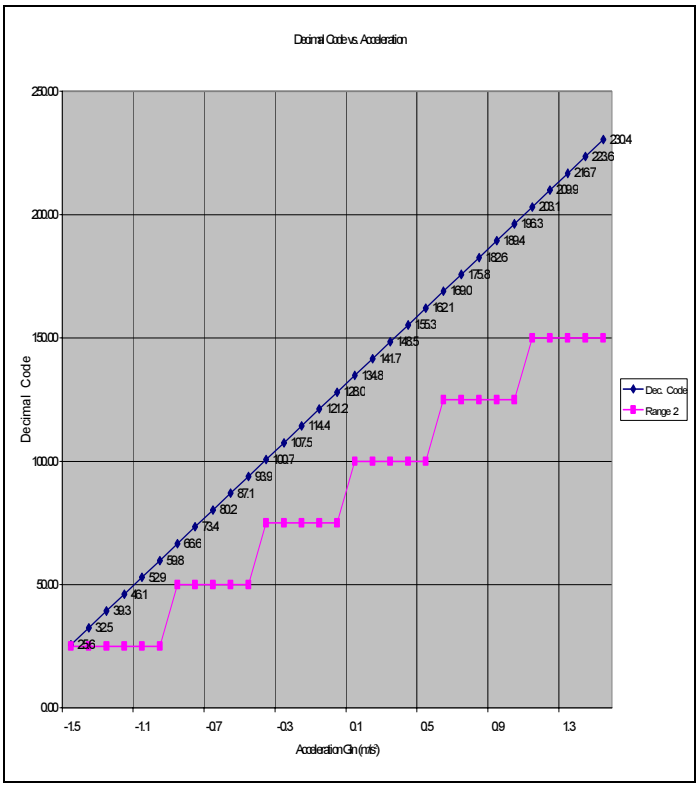

Figure 9. Code Value vs. Acceleration

The software will accept 6 input ranges on each channel; Lateral acceleration and forward acceleration. These twelve simultaneous possibilities generate 36 different combinations for which a different response is required. The response requirement is described in table 1, showing the effect of the motion of the car on every wheel.

	FL	FR	RL	RR
PL	+	+		
ML			+	+
PT		+		+
MT	+		+	
PTML		+	+	++
PTPL	+	++		+
MTML	+		++	+
MTPL	++	+	+	

Table 1. Response Requirements at the Wheels.

'+ = Weight transfer origin (step up voltage)
'++ = Cross weight transfer origin
blank = laden wheel (weight transfer destination)
PL = Longitudinal (X) Acceleration (+)
ML = Longitudinal (X) Deceleration (-)
PT = Left Lateral (Y) Acceleration (+)
MT = Right Lateral (Y) Acceleration (-)

From the above table and the different response combination, the MicroController will run the input and output the most compatible and fastest response.

The Function list [7] available to controlling the output voltages is shown below:

```
extern void coilxv1(void);
extern void coilxv2(void);
extern void coilxv3(void);
extern void coilxidle(void);
```

where ‘x’ is the number assigned to each individual coil (1,2,3 or 4).

Each one of these functions will clear or set the appropriate bit to activate the required voltage at the gate of the MOSFET. In addition to the hardware protection (reverse battery protection diodes and transient response due to inductive spikes clamping zeners), the software uses a failsafe routine. Software failsafe will guarantee that two of the voltages are off on the channel before the required voltage is turned on [7].

```
void coil1v1(void){
PORTP &=~0x02;        Clears PORTP bit 2 first.
PORTP|=0x01;}         Then sets PORTP bit 1.
```

CONCLUSION

This paper has briefly discussed each area of an active damping system for an open wheel racecar. The results of preliminary testing have already opened new possibilities to our development group, which are being pursued presently. However, for the primary goal of controlling chassis movement in roll brought on by corner entry at various speeds, the active damping is a great advantage.

We have been able to substantially reduce many undesirable conditions of our suspension system while in a dynamic state. The following points have been addressed with considerable success:

- Eliminate sudden forces on the laden wheel contact patch to maintain maximum traction while not having to disrupt the line the driver sees fit.

- Absorb high and low frequency road disturbances without upsetting the payload but still maintaining a proper ride height for repeated terrain.

- Maintain a somewhat constant vehicle attitude throughout various maneuvers at high speeds.

- Qualify suspension design and tuning from an optimal starting point rather than critical

Each of the three basic components of our system are constantly being scrutinized for any possible enhancement possibilities. The first step will be a successful debut on our racecar but this will only be the first of many in designing and implementing a low-cost, dependable, and efficient means of overcoming conventional passive suspension system drawbacks.

REFERENCES

1. "Fundamentals of Fluid Mechanics" Munson, Young & Okiishi Zondervan, 1994.
2. "Heat Transfer" Junig, Walker Penguin Press, 1989
3. "Race Car Vehicle Dynamics" Milliken & Milliken, Juniper, 1994.
4. "Fundamentals of Vehicle Dynamics" Kipler Jewel Press, 1998.
5. Neamen, Donald A. "Electronic Circuit Analysis And Design" Mc Graw-Hill, 1996.
6. Motorola, INC., 1999, "HC12 Advance Information" Rev.3.0.
7. Hanly , Jerry R., "Problem Solving And Program Design In C" Addison Wesley, 1996.
8. Texas Instruments Data Books, "High Speed CMOS Logic" 1992.

DEFINITIONS, ACRONYMS, ABBREVIATIONS

M.R. – Magneto-*Rheology*

Ride Rate

$$RR = \frac{(K_s \cdot K_t)}{(K_s + K_t)} \quad (1)$$

Suspension's Natural Frequency

$$f_n = \left(\frac{1}{2 \cdot \pi}\right) \cdot \sqrt{\frac{(RR \cdot g)}{W}} \quad (2)$$

Damping Ratio

$$\zeta_s = \frac{C_s}{\sqrt{(4 \cdot K_s \cdot M)}} \quad (3)$$

Damped Natural Frequency

$$\omega_d = \omega_n \cdot \sqrt{(1 - \zeta_s^2)} \quad (4)$$

Load Transfer

$$LT = \frac{a * weight * c.g.height}{TrackWidth} \quad (5)$$

Cornering Force (6)

$$CF = a * \left(\frac{\mu}{\mu_{eff}}\right) * (LT + weight_{static})$$

Cornering Power

$$C_P = \frac{\frac{CF}{2}}{Weight_{static}} \quad (7)$$

Dynamic Cornering Force

$$CF_d = \frac{mass * (velocity)^2}{radius} \quad (8)$$

Definition of Variables

RR = Ride Rate

Ks = Spring Rate

Kt = Tire Stiffness

ω_n = Natural Frequency (rad/sec)

f_n = Natural Frequency (cycles/sec)

M = Sprung Mass

G = Acceleration of Gravity

ζ_s = Damping Ratio

C_s = Suspension Damping Coefficient